GASS®

Aluminum Shoring System

HARSCO
INFRASTRUCTURE

GASS®

Heavy duty aluminum shoring system

Speed coupled with safety.
The GASS® aluminum shoring system has been designed and developed to meet the speed, safety and economic demands of today's construction jobs.

The GASS shoring system was developed utilizing the extensive experience gained by working on some of the largest and most demanding construction jobs worldwide. This "next generation" aluminum shoring system is the result of that experience.

- Fast, easy erecting and dismantling, only three main components. Heaviest component only 51 lbs.
- Strong—capacity of up to 24,000 lbs.
- Ideal for use on: bridges, wastewater treatment plants, stadiums, power turbine pedestals, reservoirs, tunnels and parking garages.

The GASS® system is designed to be safer, stronger and more versatile than any other previously available system… with all of these benefits, it still provides competitive economic advantages. Only three main components are required, therefore, GASS is easy to use and erection and dismantling time is reduced, leading to considerable labor savings. The GASS system offers assembly savings coupled with strength and versatility and brings the benefits of aluminum shoring to a much wider range of construction products. GASS can be used as a post shore, frame system or can be rolled or flown as a table.

GASS®

Heavy duty aluminum shoring system

Main Components

GASS® has been designed to require only 3 main components, resulting in minimum component identification difficulties, and ultimate adaptability and configuration options for the user.

OUTER LEG

Benefits of the Outer Leg

- Up to 19′-7½″ (6.0 m) with 1 Outer Leg and 1 Inner Leg.
- 8 slot profile allows versatility for attachment of Ledger Frames in multiple directions.
- No loose parts.
- Interlocking Head Plate eliminates eccentricity
- Raised Lip on headplates ensures (4)–½″ x 2½″ (12 mm x70m) bolts and nuts complete with 2 washers remain in place.
- Latch design enables Inner Leg to be secured safely every time.

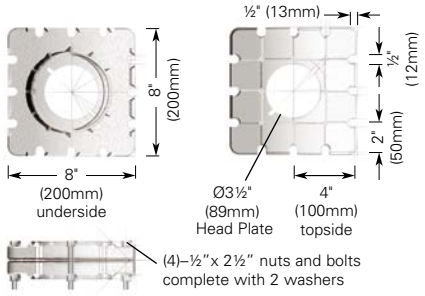

Headplate to Headplate Connection

Specification/properties

Outer Leg Material: Extruded Aluminum
Leg Plate Material: Cast Aluminum
Area: 2.48in2 (16.00 cm2)
I Value: 5.65in4 (235 cm4)
E Value: 10000 KSI (68900 N/mm2)

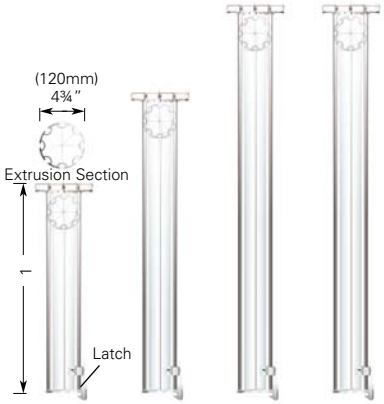

size L:	4′-7″ (1.40 m)	8′-2″ (2.49 m)	11′-9″ (3.58 m)	15′-4″ (4.67 m)
weight:	17.75 lb	28.14 lb	38.39 lb	48.73 lb
code no:	1718001	1718002	1718003	1718004
Height range: (with 1 inner leg)	4′-10½″ to 8′-10″ (1.49 m) (2.69 m)	8′-5½″ to 12′-5″ (2.58 m) (3.78 m)	12′-0½ to 16′-0″ (3.67 m) (4.87 m)	15′-7¼″ to 19′-7″ (4.76 m) (6.0 m)

INNER LEG

Benefits of the Inner Leg

- Up to 51″ continuous adjustment.
- Interlocking Base Plate eliminates eccentricity.
- Dry coated thread on cast collar requires no additional lubricant.
- Cast collar for optimum strength.
- Removable safety screw for easy collar replacement.

Specification/properties

Inner Leg Material: Rolled Aluminum Extrusion
Collar Material: Cast Ferrous
Head Plate Material: Cast Aluminum
Area: 2.47 in2 (15.94 cm2)
E Value: 10000 KSI (68900N/mm2)
Note: all Imperial dimensions are nominal

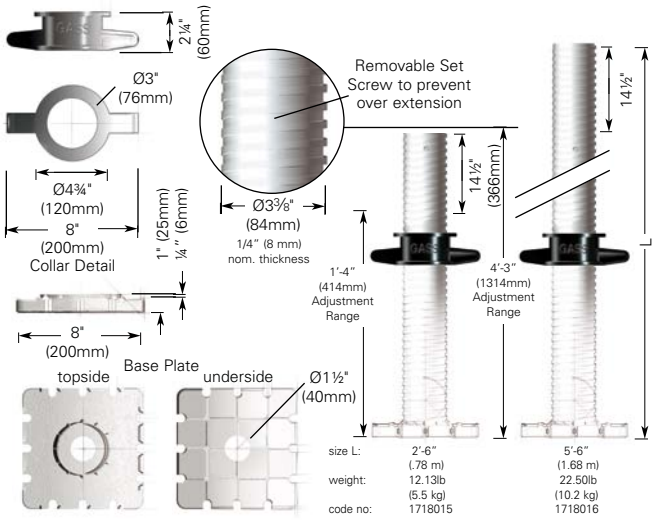

size L:	2′-6″ (.78 m)	5′-6″ (1.68 m)
weight:	12.13lb (5.5 kg)	22.50lb (10.2 kg)
code no:	1718015	1718016

Benefits of the Ledger Frame

- Only 4 wedge connections per frame result in fast installation.
- Clearly visible wedge results in easy identification that Ledger Frame is safely and correctly installed.
- Ledger Frames can be removed from an erected structure, to enable personnel and material access.
- Ledger Frames in 4 sizes offer the user versatility with a minimum number of components.

Specification/Properties

Ledger Frame
Material: Aluminum Alloy
Tube Size: 1.9" OD (48 mm)
All diagonal fixed tubes are 1.73" OD (44 mm)
Horizontal Shear: 2 kips
Safety Factor: 2.5:1
Note: all Imperial dimensions are nominal

size (nom*):	10′ (3.0 m)	8′ (2.4 m)	6′ (1.8 m)	4′ (1.2 m)
weight:	34.74 lb (15.76 kg)	29.45 lb (13.36 kg)	22.71 lb (10.3 kg)	20.72 lb (9.4 kg)
code no:	1718023	1718022	1718021	1718020

*Size is nominally measured from center of leg to center of leg.

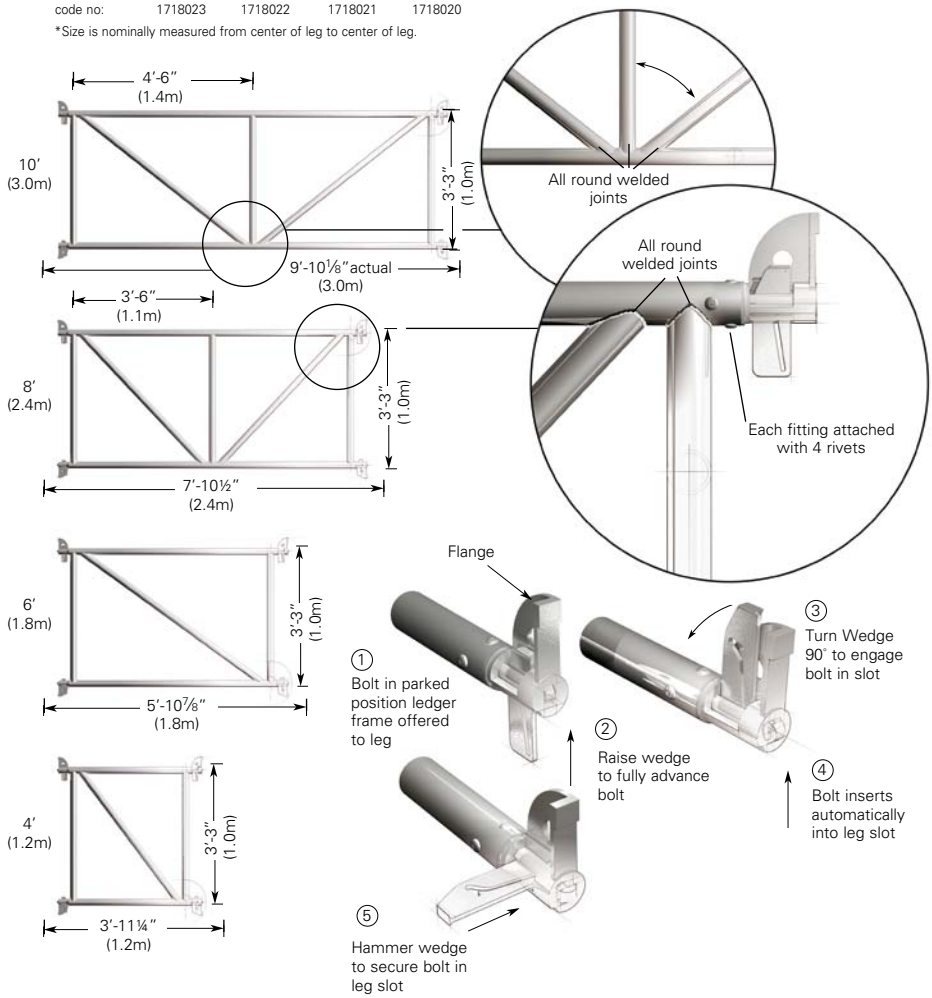

GASS®
Common Accessories

Swivel / Rocking Head Plate
Code No. 1718090
When there is a requirement to cope with sloping soffits or bases, GASS® can remain versatile and competitive simply by attaching the Swivel/Rocking Head Plate to either the Head, Base or Jack Plate to allow for any slope up to 15°. Head plate attachment: (4)–½" x 2 ½" (12 mm x 70 mm) nut and bolt complete with 2 washers required. Beam attachment: 2 each GASS T bolts required.

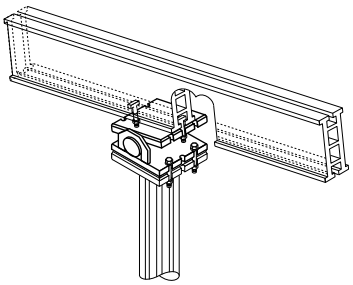

Extension Legs
(nominal length)

Size 1'- 8" (500 mm)	**Code No. 1718007**
Size 4'- 7" (1.40 m)	**Code No. 1718008**
Size 8'- 2" (2.49 m)	**Code No. 1718009**
Size 11' - 9" (3.58 m)	**Code No. 1718010**
Size 15'- 4" (4.67 m)	**Code No. 1718011**

Where very high shoring is required, the GASS Extension Leg allows multiple leg stack-ups. (4)–½" x 2½" (12 mm x 70 mm) nut and bolts complete with 2 washers required.

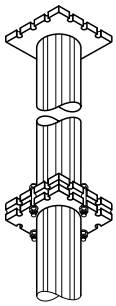

Short Link
Size 1'- 4" (400 mm) Code No. 1718062. Utilizing the Short Link, GASS outer legs can be closely linked together to ensure high load capacity.

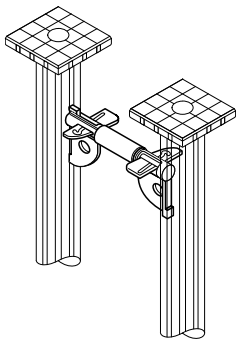

Saddle Beam

Size 4'- 0" (1.20 m)	**Code No. 1718068**
Size 6'- 0" (1.80 m)	**Code No. 1718069**
Size 8'- 0" (2.40 m)	**Code No. 1718070**

Where drop beams occur in slabs, there is no need to have independent shoring under the beams. Simply install Saddle Beams with the GASS Inner Legs, allowing a second level of support to be set under the beams.

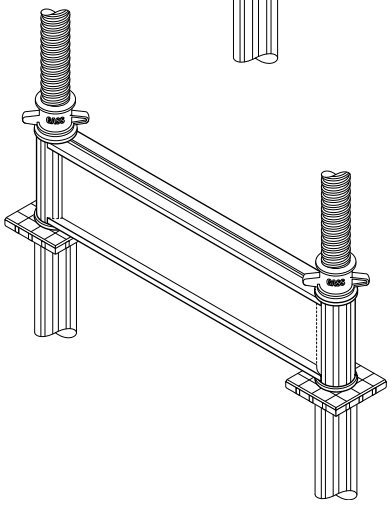

Note: all Imperial dimensions are nominal

ASSEMBLY GUIDE

In our experience the fastest way to erect GASS® up to 20'-0" high and 3 Ledger Frames in height is the "Goal Post" method illustrated in the following sequence.

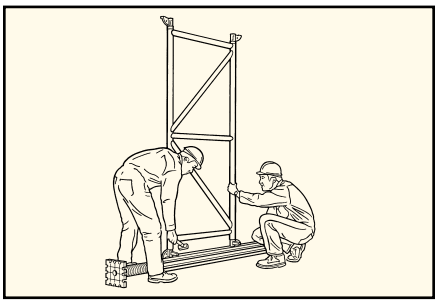

1 Set Inner Leg at required height and insert into Outer Leg. Attach one end of Ledger Frame to uppermost slot of Outer Leg, making sure that the thick end of wedge rotates down when actioning sequence 2.

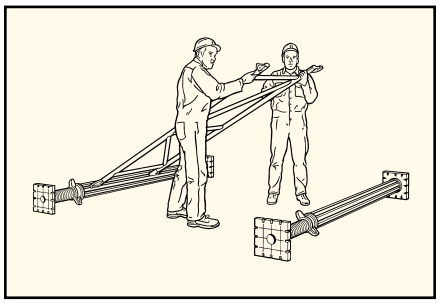

2 Rotate Ledger Frame to lay flat, and secure Outer Leg such that the thick end of the wedge will rotate up.

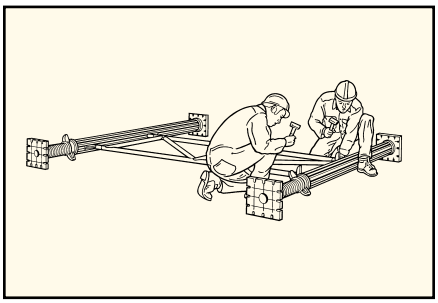

3 Attach Ledger Frame to second Outer Leg in the required position

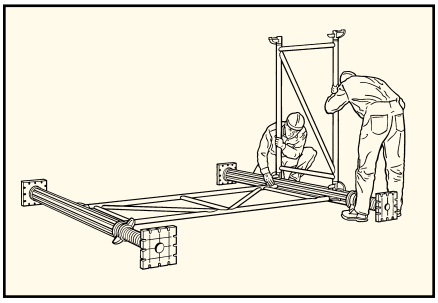

4 Attach Ledger Frame at right angles to first Ledger Frame in uppermost slots of Outer Legs.

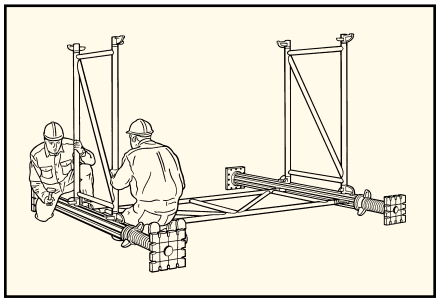

5 Repeat to complete 3 sides of a bay.

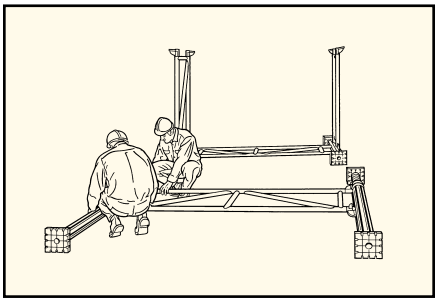

6 Repeat steps 1 and 2 separately to assemble 4th side.

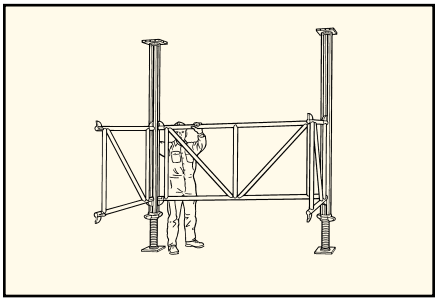

7 Lift the 3 sided bay into position.

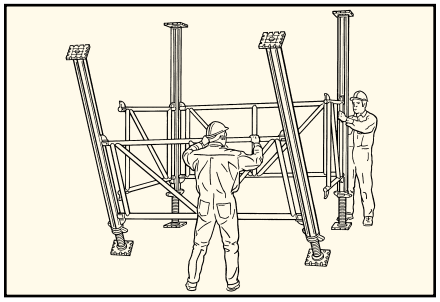

8 Lift the 4th side up to meet the other 3 sides. Engage wedges to secure in place. Level both horizontally and vertically using a Level and Measure.

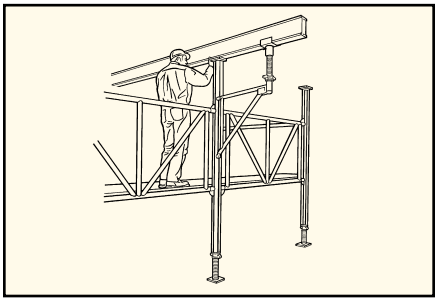

9 The system can be added to with individual components or further pre-assembled 3 sided bays. Finally, attach any accessories including Cantilever Brackets and Aluminum Beams, followed by plywood.

Harsco Infrastructure
A Division of Harsco Corporation
650 From Road
Paramus, NJ 07652

Phone: 1-800-969-5600
Fax: 201-261-5544
Email: info@harsco-i.us
www.harsco-i.com

Photos and diagrams are illustrative only. All products and equipment shall be used or offered for sale only where permitted by law or governmental regulations, codes or ordinances and shall be used in strict conformity therewith and for the purposes and in the manner as may be prescribed therein and in conformity with safe practice. Specifications of products and equipment shown herein are subject to change without notice.

HARSCO
INFRASTRUCTURE

WARNING

Serious injury may result if you fail to use safe practice in the erecting, dismantling or use of mast climbing work platforms, scaffolding, shoring and/or forming equipment. Erectors, dismantlers and users must be familiar with and follow current laws and regulations, safe practice and the Safety Rules and Instructions. Individuals using this equipment must be instructed in these requirements. Safety Rules and Instructions pertaining to the products shown herein are provided upon sale or rental of equipment. Additional copies or further information shall be provided upon the customer's request.

It is important to note that current OSHA regulations require the use of guardrail systems and/or fall-protection devices at all working levels, open sides, and at all other openings on platforms and work areas above certain heights, as specified by OSHA. In all cases, where a worker is exposed to a fall hazard in the use of this equipment, guardrail systems, where appropriate, or other personal fall-protection devices, must be utilized. Means of access must be made available by the customer to all locations where people are expected to work. Materials for the provision of such means of access may be job-built by the customer or, at the customer's option, be obtained through Harsco Infrastructure or other suppliers. Harsco Infrastructure will, at the customer's request, consult on an alternative means of access.

© 2011 Harsco Infrastructure. All rights reserved.